International Journal of Engineering Applied Science and Management
ISSN (Online): 2582-6948
Vol. 2 Issue 10, October 2021

Grid-Connected Wind-Photovoltaic Cogeneration Using Back-to-Back Voltage Source Converters with fuzzy logic controller

Jay Shankar Prasad Pandey[1], Dr. Girraj Prasad Rathor[2]
Research Scholar, Department of Electrical and Electronics TIT & Science BHOPAL(MP)[1]
Associate Professor Department of Electrical and Electronics TIT & Science BHOPAL(MP)[2]

Abstract: *In this paper, PVA and PMSG wind farm renewable sources share power to the grid through a common DC link. A single inverter is integrated to inject the power from these renewable sources. A permanent magnet synchronous generator-based full-scale wind turbine is interfaced to the utility-grid via back-to-back voltage-source converters (VSCs). A PV solar generator is directly connected to the dc-link capacitor of the Back-to-back VSCs. The regulation of the VSCs is achieved via the vector control scheme in the rotating reference frame. The speed controller of the PSMG is updated with fuzzy logic controller, which makes the machine side converter to operate at higher efficiency. The powers of PMSG delivered are compared with PI and FIS at different operating conditions.*

Keywords: *Wind turbine, solar photovoltaic array, voltage-source converter, fuzzy logic controller, power quality.*

1. Introduction

Nowadays, where the renewable energies are the new trend and sustainable technologies are starting to play a big role in the society in order to eliminate the dependence on fossil fuels, finding the way to collect these clean energies and to convert them into electricity at their highest performance is without any doubt essential. Nevertheless, the way to link the power generated from these renewable sources to the main grid is as well significant. [1]

Energy consumption is thought to be one of significant contributors to environmental pollution because of degradation of fossil fuel resources, emission of harmful Green House Gases and so on. Annual energy consumption will be doubled by the year of 2050 if the present rate of population growth is retained. Due to factors as such, a significant percentage of power generation means are gradually involving renewable or clean energy sources such as solar, wind, tidal etc. [2]

A solar and small-scale wind energy farm-based hybrid power generation is to mitigate major fluctuation between peak and medium load level in a diesel power driven medium scale grid. An increment of power generation efficiency has been focus of discussion considering mix of solar, wind, conventional sources and storages along with combined heat and power systems. The discussion offers microgrid as a mean of operation and management for all the distributed energy resources. A financially more viable microgrid scheme is proposed where it is observed that hybrid renewable energy sources based microgrid turns out to be more feasible economically than sole kind of source based scheme. [3]

1.1 Renewable Sources

Over the past decade, rapid growth of photovoltaic (PV) technologies and wind energy systems has been experienced over the world. The PV and wind energy are considered as the most promising and major renewable energy source due to providing a clean energy at various power levels and in various sites including domestic, due to a vast and unfailing energy, and constantly replenished energy supply [4] They offers significant improvement to the energy security, national income, public health, and protecting the environment. Solar power and wind energy has become the world's most attractive and, in some cases, the cheapest form of new electricity generations.

1.2 Photovoltaic Array and Power Generation

Photovoltaic systems can be sorted according to their power levels or based on system configuration or the connection to utility grid. A typical PV system comprises four parts: the PV array, power conditioner, storage system, and PV inverter. Then the system is connected to the utility grid with or without local load. Fig. shown below illustrates a basic PV system integrated with utility grid and local load [5]. Solar cells are combined in series to construct PV modules, converting solar energy to electric power. PV modules can be combined in series and/or in parallel to assemble a PV array matching the electric power demand.

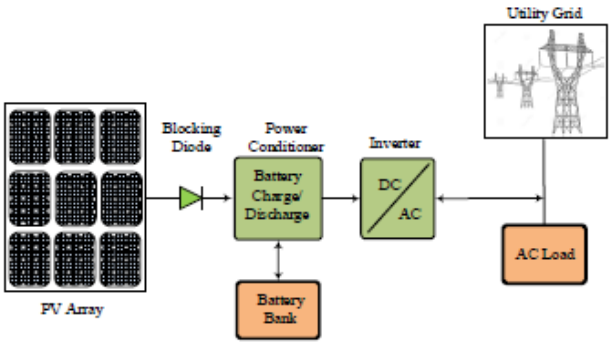

Figure **Error! No text of specified style in document.**.1: Block diagram of basic PV

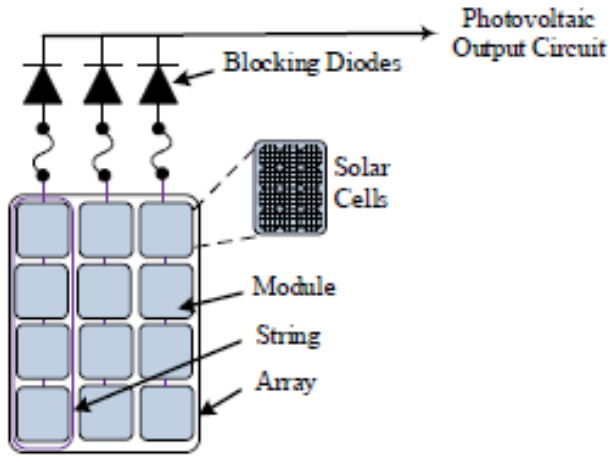

Figure 2 Photovoltaic System Components

An array is a structure that consists of a number of PV modules, mounted on the same plane with electrical connections to provide enough electrical power for a given application. Arrays range in power capacity from a few hundred watts to hundreds of kilowatts. The connection of modules in an array is similar to the connection of cells in a single module. To increase the voltage, modules are connected in series and to increase the current they are connected in parallel. Matching is again very important for the overall performance of the array. The structure of an array is shown in figure, which has 4 parallel connections of 4 module strings connected in series. [5-6]

1.3 Wind energy

For hundreds of years, people have used windmills to harness the wind's energy. Today's wind turbines, which operate differently from windmills, are a much more efficient technology. In past windmills have been used for pumping water or grinding grain [7]. Today, the windmill's modern equivalent - a wind turbine - can use the wind's energy to generate electricity. Human resort to rely on wind turbines to extract energy from wind, electric power generation ones, as wind power is used to produce mechanical energy in so-called windmills. Wind consider is a form of solar energy and nearly 2% percent of the sunlight that falls on the Earth's surface light turns into kinetic energy of the wind [8]. This is a huge amount of energy can be utilized to produce electrical energy. Wind turbines, like windmills, are mounted on a tower to capture the most energy. At 100 feet (30 meters) or more aboveground, they can take advantage of the faster and less turbulent wind. [9]

Wind turbine technology may look simple: the wind spins turbine blades around a central hub; the hub is connected to a shaft, which powers a generator to make electricity. However, turbines are highly sophisticated power systems that capture the wind's energy by means of new blade designs or airfoils. Modern, mechanical drive systems, combined with advanced generators, convert that energy into electricity. Wind turbines that provide electricity to the utility grid range in size from 50 kW to 1 or 2 MW. Large, utility-scale projects can have hundreds of turbines spread over many acres of land. [10]

2. Methodology

The proposed system consists of a VSR to interface the wind generator, and a VSI to connect the cogeneration system into the utility-grid. The PV generator is directly connected to the dc-link capacitor of the BtB VSCs via a dc cable. The VSR and VSI are two-level converters consisting of six cells; each comprises an insulated-gate-

bipolar transistor (IGBT) in parallel with a diode. In the following subsections, the complete modeling and control of the proposed system is provided.

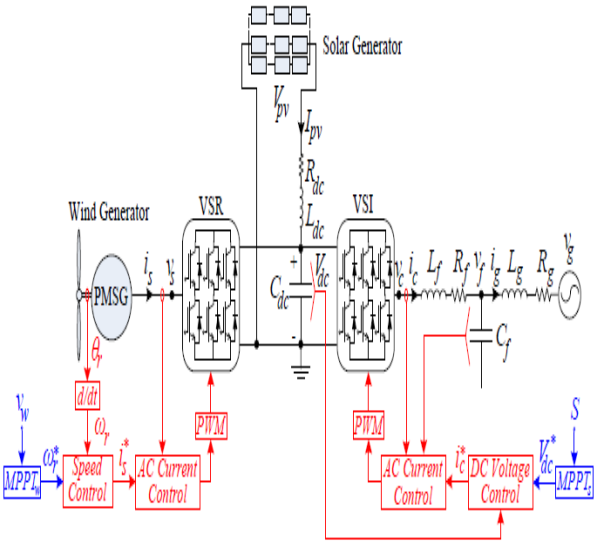

Figure 2 The proposed wind-PV cogeneration system

3. Control Technique

3.1 Fuzzy Logic Controller

The DC side capacitor voltage must be measured and compared to a reference value in order to implement the control algorithm of a shunt active filter. Fuzzy processing has two inputs: error and error change. The control action of a fuzzy controller is determined by a set of linguistic rules. It has the advantage of not requiring a mathematical model and working with erroneous inputs.[11-15].

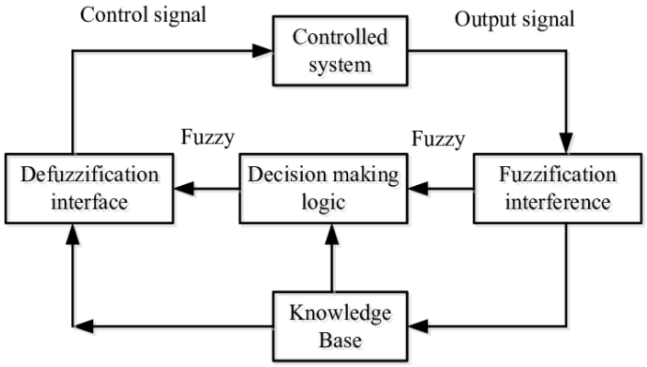

Figure 3 Block diagram of Fuzzy Logic Controller

3.2 Advantages of Fuzzy Logic Controller

The following are the benefits of fuzzy control over other adaptive control methods:
It shares output to input without much awareness of all the variables, allowing for more precise system design. The language, rather than numerical, factors make the process resemble that of human thought. They are more resilient than PI controllers due to their capacity to encompass a large number of operational circumstances.

- FLC is cost-effective.
- FLC is adaptable.
- FLC is a trustworthy company.
- FLC is more efficient.
- It improves stability.

The Mamdani fuzzy controller outperforms the PI controller; however, it comes with the drawback of a higher number of fuzzy sets and rules. Additionally, in order to surpass the typical PI controller, all of the coefficients must be increased. The fuzzy control system requires less time to settle than the PI control system.

4. Simulation Result & Discussion

A time-domain simulation model is developed under the Matlab/Simulink® environment as shown in figure given below to evaluate the validity and the performance of the system. The wind and PV generators are rated at 2.0 and 0.9 MVA, respectively.

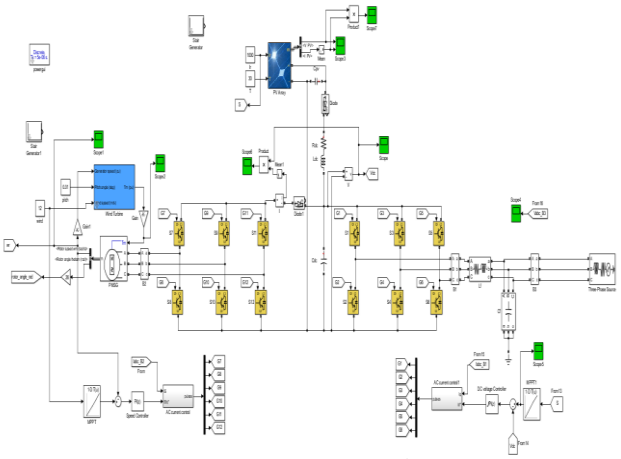

Figure 4 Proposed system with PSMG wind farm and PVA module

The above is the proposed test system with PMSG connected to controlled rectifier. The rectifier is controlled by sinusoidal PWM generator with feedback from the

PMSG rotor speed. The grid side converter has feedback from the solar irradiation which estimates the DC link voltage through MPPT generating the reference for the controller. The below are the three phase voltages and current of the grid during renewable power sharing with variable environmental conditions.

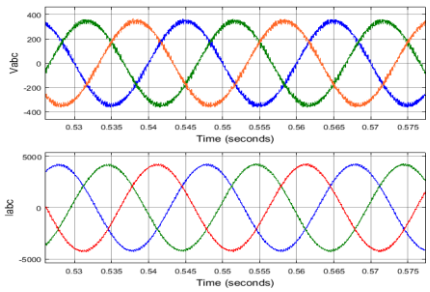

Figure **Error! No text of specified style in document.** Grid three phase voltages

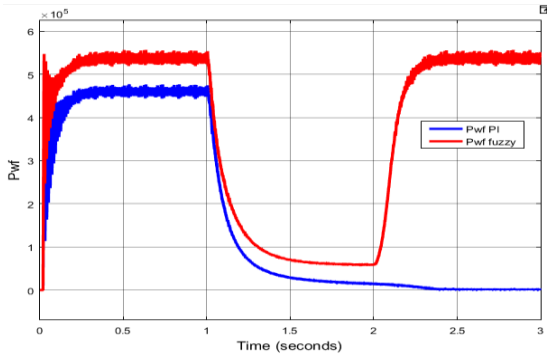

Figure 6 Wind farm power comparison with PI and FIS controllers

As observed the power of the wind farm is more for fuzzy logic controller as compared to PI controller. The power is also not recovered after the wind speed in back to normal after some time in PI controller. The power of the wind farm is recovered to optimal value when the wind speed is back.

5. Conclusion

As seen in the above results the powers form the PMSG wind farm and PVA are shared to the grid through common DC link connected to single VSI. The VSR at the wind generator-side is responsible for extracting the maximum wind power following the wind speed variations. On the utility-grid side, the roles of the VSI are to extract the maximum PV power from the PV generator, achieve the balance between the input-output powers across the dc-link capacitor, and to maintain a unity PCC voltage under different modes of operation.

References

[1] J. Ramakrishna, K. Rakesh, and T. A. Kumar, “IMPROVEMENT OF VOLTAGE PROFILE IN HYBRID PV- WIND SYSTEM USING STATCOM,” vol. 9, no. 3, pp. 348–353, 2021.

[2] S. Puchalapalli, S. K. Tiwari, B. Singh, and P. K. Goel, “A Microgrid Based on Wind-Driven DFIG, DG, and Solar PV Array for Optimal Fuel Consumption,” IEEE Trans. Ind. Appl., vol. 56, no. 5, pp. 4689–4699, 2020, doi: 10.1109/TIA.2020.2999563.

[3] F. Porté-Agel, M. Bastankhah, and S. Shamsoddin, Wind-Turbine and Wind-Farm Flows: A Review, vol. 174, no. 1. Springer Netherlands, 2020.

[4] H. Oussama, A. Othmane, C. Abdeselem, and H. M. Amine, “Wind turbine generator based on PMSG connected to DC microgrid system,” vol. 7, pp. 40–43, 2019.

[5] N. K. Singh and D. Kumar, “A Review on Wind Turbine and Wind Generator Used in WECS,” Int. J. Sci. Res. Sci. Eng. Technol., no. July, pp. 01–04, 2019, doi: 10.32628/ijsrset19635.

[6] S. Ansari, “Assessment of Renewable Energy Sources of Iran,” vol. 6, no. 12, pp. 206–211, 2019.

[7] A. Tekale, V. Ware, and V. Devkar, “Hybrid Power Generation by Solar & Vertical Axis Wind Turbine: A Review,” Ijireeice, vol. 6, no. 10, pp. 15–19, 2018, doi: 10.17148/ijireeice.2018.6103.

[8] S. Ma Lu, “Modelling, Control and Simulation of a Microgrid based on PV System, Battery System and VSC,” Attrib. 3.0 Spain, no. January, p. 81, 2018, [Online]. Available: Google Scholar.

[9] A. Muhtadi and A. M. Saleque, “Modeling and simulation of a microgrid consisting solar PV & DFIG based wind energy conversion system for St. Martin’s Island,” 2017 IEEE 3rd Int. Conf. Eng. Technol. Soc. Sci. ICETSS 2017, vol. 2018-Janua, no. March 2018, pp. 1–6, 2018, doi: 10.1109/ICETSS.2017.8324152.

[10] A. Muhtadi, “Solar PV & DFIG based Wind Energy Conversion System for St. Martin’ s Island,” 2017 IEEE 3rd Int. Conf. Eng. Technol. Soc. Sci., 2017, [Online].

[11] P. S. Sujay, W. M. M, and S. N. N, “A Review on Floating Solar Photovoltaic Power Plants,” Int. J. Sci. Eng. Res., vol. 8, no. 6, pp. 789–794, 2017, [Online]. Available: http://www.ijser.org.

[12] P. S. U. Kulkarni and T. Gupta, "A Review on PMSG Based Wind Energy Conversion System," vol. 2, no. 1, pp. 271–275, 2017.

[13] K. M. Abo-Al-Ez and R. Tzoneva, "Active power control (APC) of PMSG wind farm using emulated inertia and droop control," Proc. Conf. Ind. Commer. Use Energy, ICUE, vol. 2016-Octob, no. August 2016, pp. 140–147, 2016.

[14] T. Khatib, I. A. Ibrahim, and A. Mohamed, "A review on sizing methodologies of photovoltaic array and storage battery in a standalone photovoltaic system," Energy Convers. Manag., vol. 120, pp. 430–448, 2016, doi: 10.1016/j.enconman.2016.05.011.

[15] R. Prakash and S. Singh, "Designing and Modelling of Solar Photovoltaic Cell and Array," IOSR J. Electr. Electron. Eng., vol. 11, no. 2, pp. 35–40, 2016, doi: 10.9790/1676-1102033540.